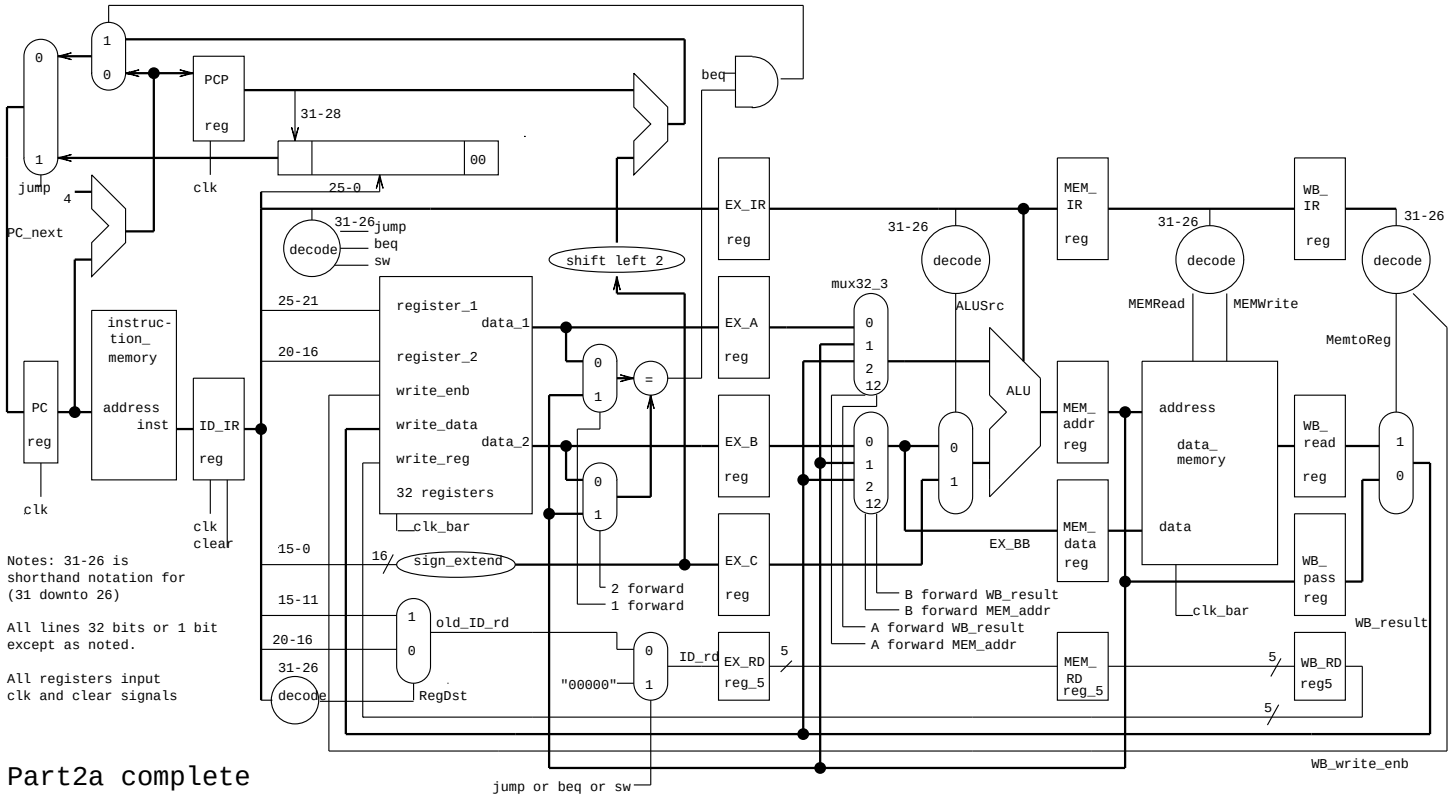

Notes: 31-26 is shorthand notation for (31 downto 26)

All lines 32 bits or 1 bit except as noted.

All registers input clk and clear signals

Part2a complete