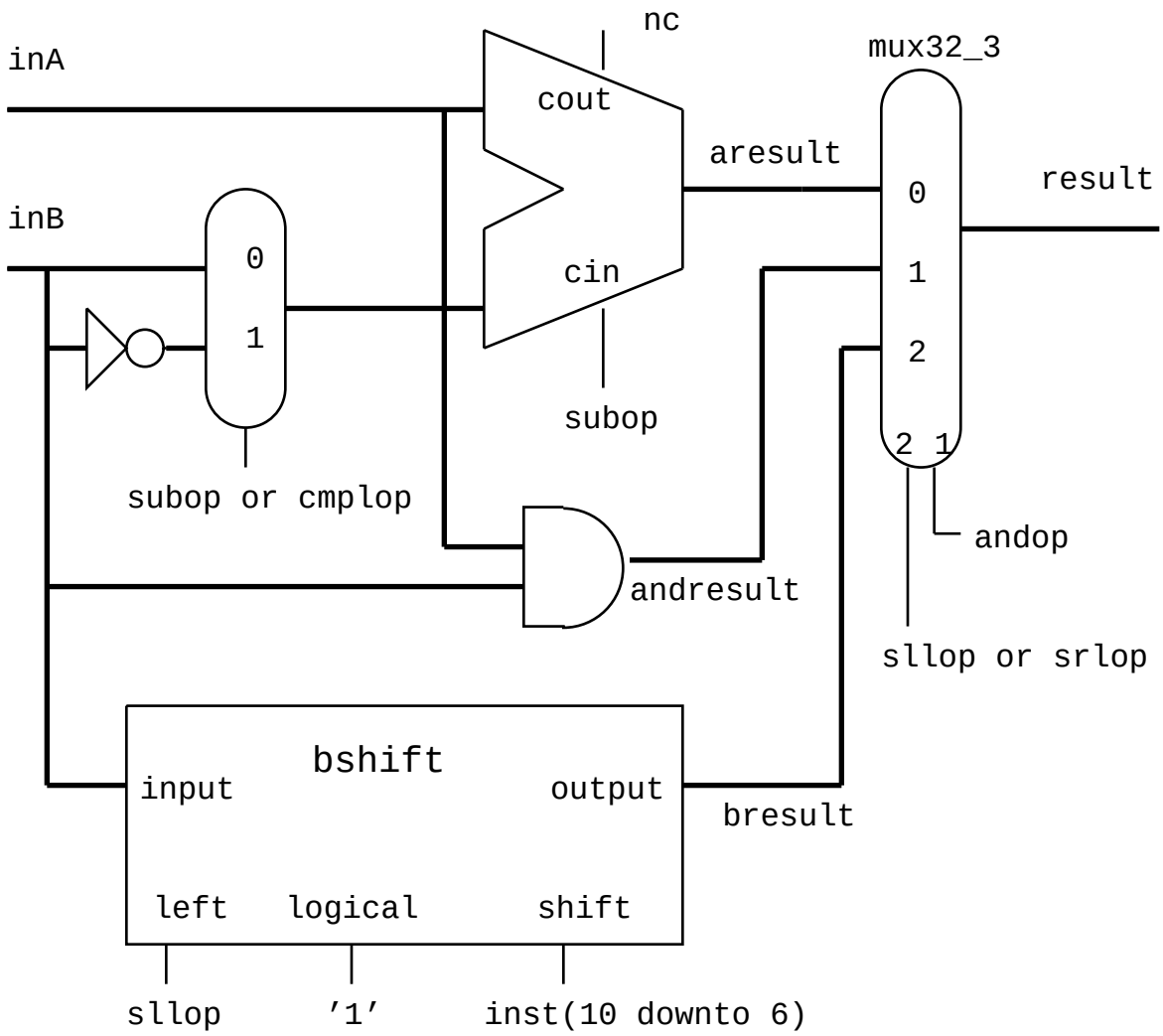

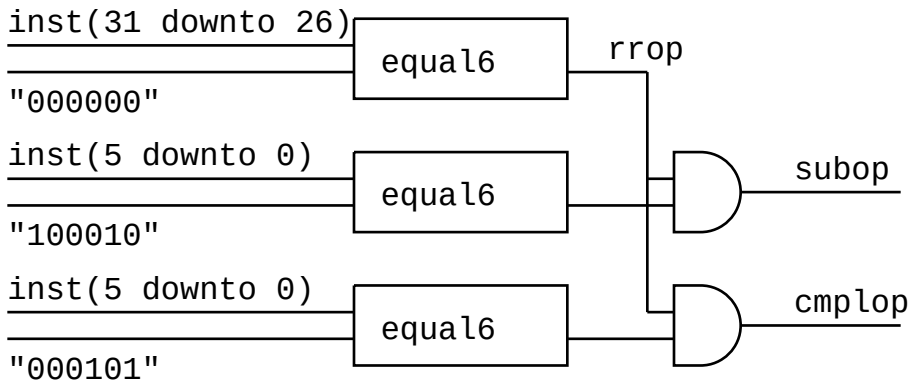

continue for sllop, srlop, andop

A possible ALU schematic